FLANGED SOFT SEALING GATE VALVE S15 3000
with position indicator & open-close limit switch
DN 40 - 600 PN10/16

01.601LS

Product description
- Flanged soft sealing gate valve series 3000 with position indicator and open-close switch for drinking water and neutral liquids
- Service temperature from 0ºC (excluding frost) to 70ºC

Standards
- Designed according to EN 1074 part 1 & 2 and EN 1171
- Flange drilling to EN 1092-2 PN10/16
- Face-to-face according to EN 558 series 15

Tests
All valves are individually hydrostatically tested according to EN 1074-1/2 and EN 12266-1:
- Seal 1.1 x PN (in bar); Body: 1.5 x PN (in bar). Operation torque test

Corrosion protection
- Epoxy powder coating RAL 5005
- Applied internal and external with a minimum coating thickness of 250 µm
- Potable water approved epoxy coating, fusion bonded according DIN 3476-1, EN 14901-1 and GSK approved

Approvals
- ACS Potability Certificate 26 ACC NY 096
- GSK Epoxy Coating Certificate GSK-ID:1247 (RAL-GZ 662)

Features
- Isolation valve approved for drinking water
- Full bore
- Low operating torque
- The valves from DN 250 to DN 300 are equipped with an axial bearing, from DN 350 to DN 600 are equipped with two thrust bearings to ensure reduced operating torque
- Stainless steel stem with rolled threads produced by cold rolling process, which keeps the steel structure and increase its mechanical resistance
- Stem sealing system with 4 O-rings in EPDM
- O-ring stem sealing exchangeable under pressure
- Wedge fully vulcanized with drinking water approved EPDM
- Top of the wedge conceived with “soft stop” system, which acts as an end stop for the fully open valve
- Wedge with brass nut fixed in the wedge core preventing vibration and ensure a long life span
- Wedge and body designed with “monorail” system
- Round EPDM bonnet gasket fixed in a recess, surrounding the bolts, ensuring a perfect seal
- Body/bonnet bolts in stainless steel A2 encased and sealed ensuring full corrosion protection
- Position indicator for visual display of gate position
- Limit switches for electrical signal transmission with open and close position of the valve
- Accessories: handwheel [ref. 05.100], stem cap [ref. 05.200]
- On request possibility of stem in stainless steel AISI 316L, NBR sealings and wedge nut in different brass alloys.



ATTESTATION DE CONFORMITE SANITAIRE ACS

RAL GUTEZEICHEN SCHWERER KORROSIONSSCHUTZ VON ARMATUREN UND FORMSTÜCKEN

100% MADE IN EUROPE

Fucoli-Somepal FUNDIÇÃO DE FERRO, S.A.

Visit our website at **www.fucoli-somepal.pt**

Head office: Estrada de Coselhas, 3000-125 Coimbra – Portugal | Tel.: (+351) 239 490100
Branch office: Rua de Aveiro 50, 3050-420 Pampilhosa – Portugal | Tel.: (+351) 239 490100 | comercial@fucoli-somepal.pt

Ed.8 Rev.7
03-2026

Being one of the main objectives of our company the development and satisfaction of our customers, we reserve the right to update, change or replace the specifications presented without prior notice.

FLANGED SOFT SEALING GATE VALVE S15 3000
with position indicator & open-close limit switch
DN 40 - 600 PN10/16

01.601LS

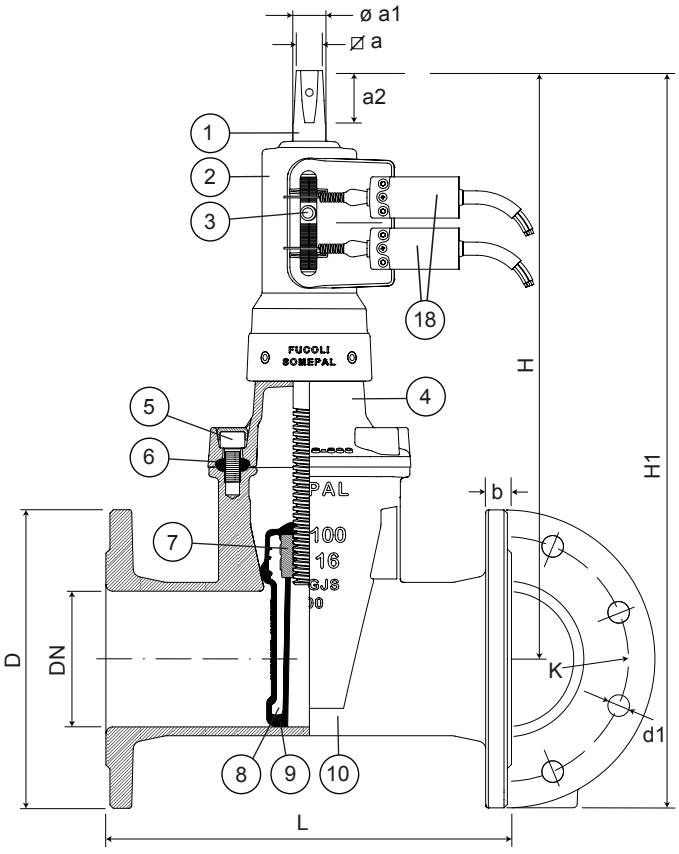

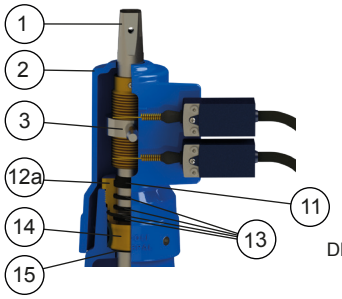

DN 40 up to DN 200

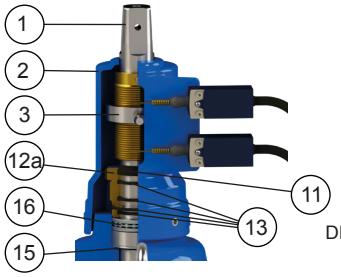

DN 250 up to DN 300

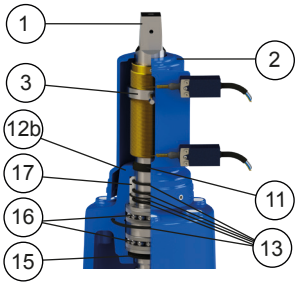

DN 350 up to DN 600

Component list

pos	components	material	standard
1	Stem	Stainless steel AISI 420	EN 10088-1
2	Coupling	Ductile iron EN-GJS-500-7	EN 1563
3	Position indicator	Stainless steel AISI 420	EN 10088-1
4	Bonnet	Ductile iron EN-GJS-500-7	EN 1563
5	Bolts	Stainless steel A2	EN 10088-1
6	Bonnet gasket	Elastomer EPDM	EN 681-1
7	Wedge nut	Brass DZR CW626N	EN 12164
8	Wedge	Ductile iron EN-GJS-500-7	EN 1563
9	Wedge covering	Elastomer EPDM	EN 681-1
10	Body	Ductile iron EN-GJS-500-7	EN 1563

pos	components	material	standard
11	Clearing joint	Elastomer	-
12a	Gland	Brass DZR CW602N	EN 12164
12b	Gland	Ductile iron EN-GJS-500-7	EN 1563
13	O-rings	Elastomer EPDM	EN 681-1
14	Stem washer	Brass DZR CW602N	EN 12164
15	O-ring	Elastomer EPDM	EN 681-1
16	Bearing	Steel	ISO 20516
17	Gland bush	POM	-
18	Open-close limit switch	-	-

Reference and dimensions

DN	PN	code	D mm	L mm	H mm	H1 mm	K mm	nº x d1 mm	b mm	⧄ a mm	ø a1 mm	a2 mm	turns to open	Kg approx.
40	10/16	10726210	150	240	298	373	110	4 x 19	19	14.1	20	29	10	13
50	10/16	10726220	165	250	327	410	125	4 x 19	19	14.1	20	29	13	14
60	10/16	10726230	175	270	341	434	135	4 x 19	19	17.1	22	34	13	16
65	10/16	10726240	185	270	341	434	145	4 x 19	19	17.1	22	34	13	16
80	10/16	10726250	200	280	361	462	160	8 x 19	19	17.1	22	34	16	21
100	10/16	10726260	220	300	427	537	180	8 x 19	19	19.1	24	38	20	25
125	10/16	10726270	250	325	469	594	210	8 x 19	19	19.1	26	38	25	30
150	10/16	10726280	285	350	538	681	240	8 x 23	19	19.1	28	38	30	40

continued on next page

All the drawing, technical data, dimensions and weights are not binding. Subject to change. The components may be replaced by equivalent or higher materials without prior notice.

FLANGED SOFT SEALING GATE VALVE S15 3000
with position indicator & open-close limit switch
DN 40 - 600 PN10/16

01.601LS

continued from previous page

DN	PN	code	D mm	L mm	H mm	H1 mm	K mm	nº x d1 mm	b mm	a⌀ mm	ø a1 mm	a2 mm	turns to open	Kg approx.
200	10	10726290	340	400	616	786	295	8 x 23	20	24.1	32	42	34	61
200	16	10726295	340	400	616	786	295	12 x 23	20	24.1	32	42	34	61
250	10	10726300	400	450	702	902	350	12 x 23	22	27.1	36	47	42	82
250	16	10726305	400	450	702	902	355	12 x 28	22	27.1	36	47	42	82
300	10	10726310	455	500	774	1016	400	12 x 23	24.5	27.1	36	47	50	137
300	16	10726315	455	500	774	1016	410	12 x 28	24.5	27.1	36	47	50	137
350	10	10726320	505	550	1114	1404	460	16 x 23	24.5	32.1	45	55	67	263
350	16	10726325	520	550	1114	1404	470	16 x 28	26.5	32.1	45	55	67	267
400	10	10726330	565	600	1114	1404	515	16 x 28	24.5	32.1	45	55	67	286
400	16	10726335	580	600	1114	1404	525	16 x 31	28	32.1	45	55	67	289
450	10	10726340	615	650	1284	1621	565	20 x 28	25.5	32.1	50	55	71	458
450	16	10726345	640	650	1284	1621	585	20 x 31	30	32.1	50	55	71	475
500	10	10726350	670	700	1284	1621	620	20 x 28	26.5	32.1	50	55	71	492
500	16	10726355	715	700	1284	1621	650	20 x 34	31.5	32.1	50	55	71	509
600	10	10726360	780	800	1491	1914	725	20 x 31	30	41.1	60	74	86	651
600	16	10726365	840	800	1491	1914	770	20 x 37	36	41.1	60	74	86	702

Fucoli-Somepal
FUNDIÇÃO DE FERRO, S.A.

Visit our website at **www.fucoli-somepal.pt**

Head office: Estrada de Coselhas, 3000-125 Coimbra – Portugal | Tel.: (+351) 239 490100
Branch office: Rua de Aveiro 50, 3050-420 Pampilhosa – Portugal | Tel.: (+351) 239 490100 | comercial@fucoli-somepal.pt

100% MADE IN EUROPE

All the drawing, technical data, dimensions and weights are not binding. Subject to change. The components may be replaced by equivalent or higher materials without prior notice